Shelby High School - Malcolm Brown Auditorium

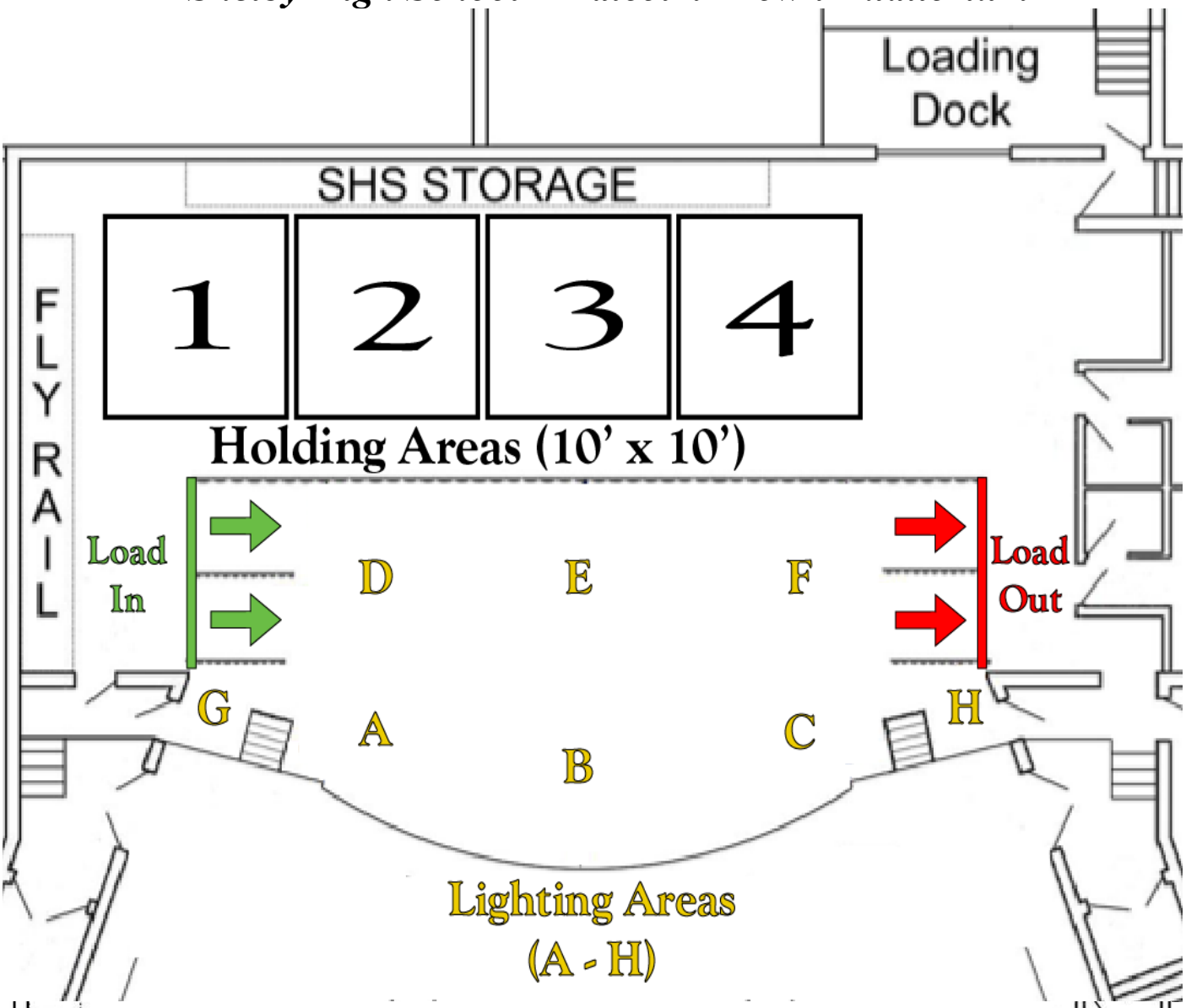

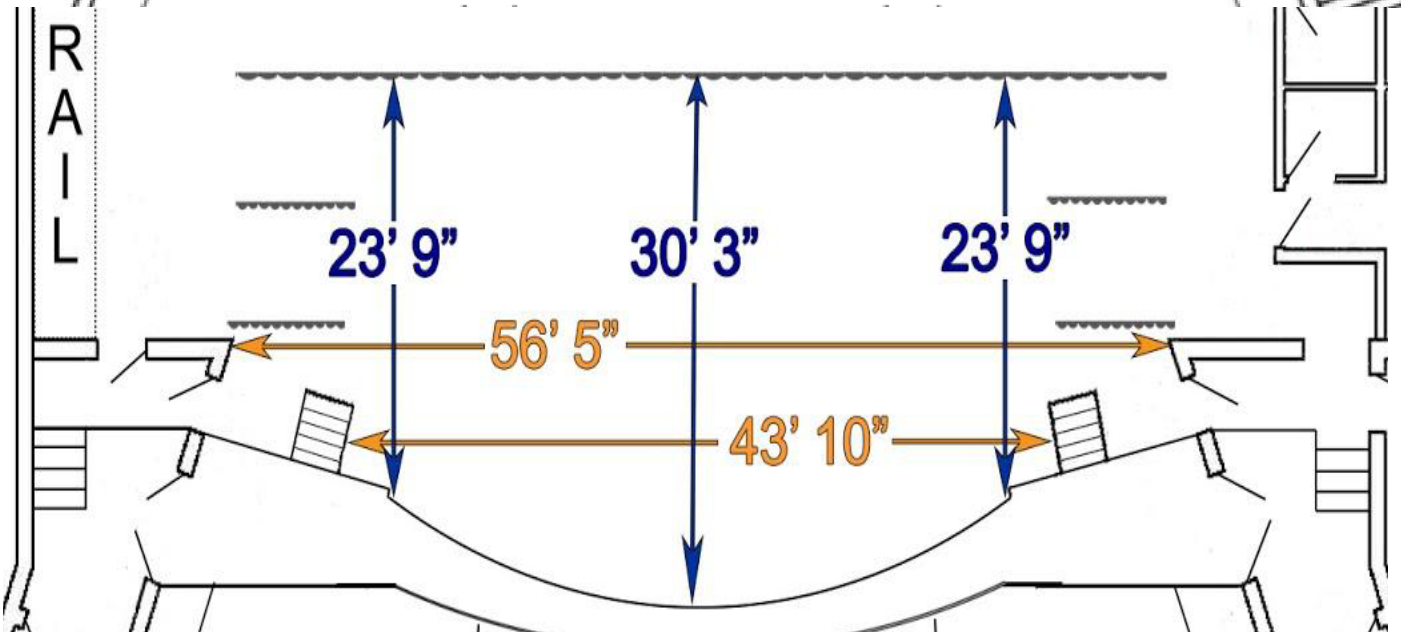

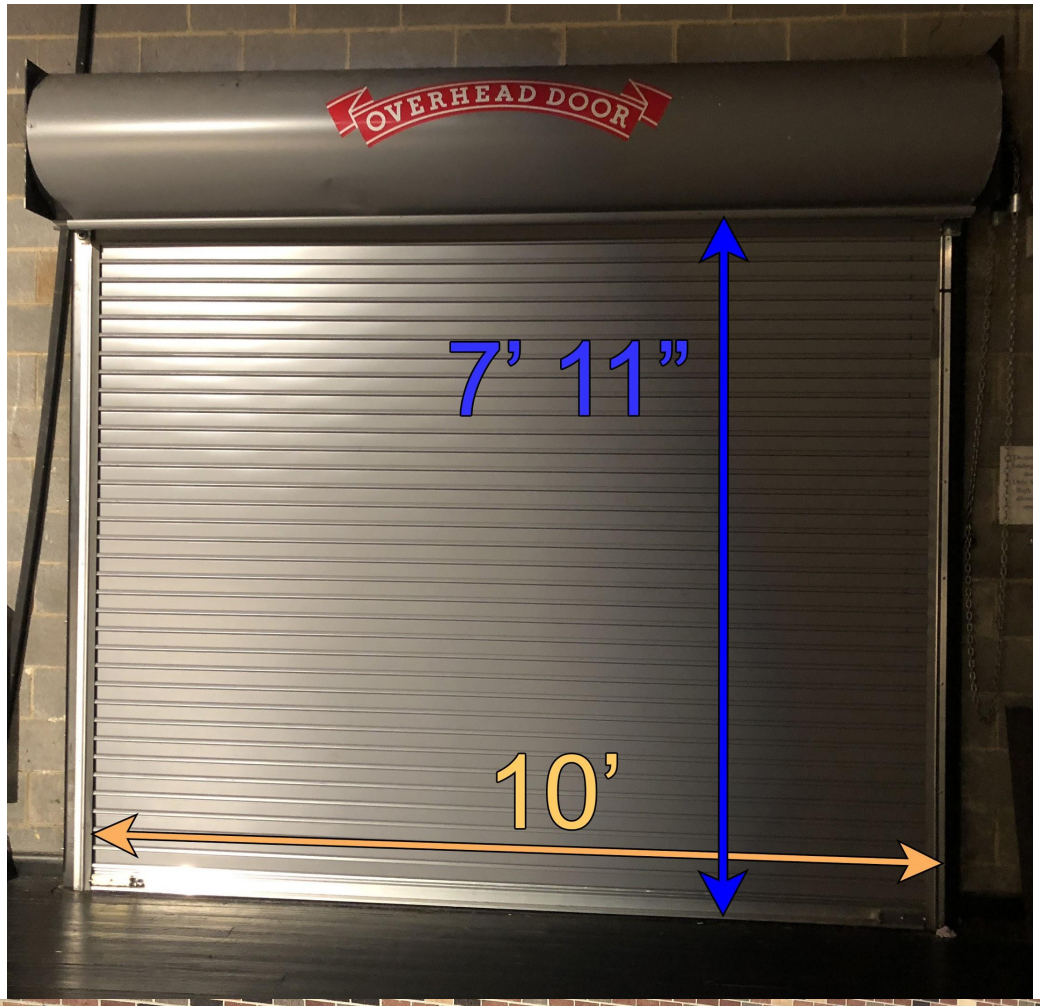
OVERHEAD DOOR
7’ 11”
10’

7’ 11”
10’

Area Information and Visuals
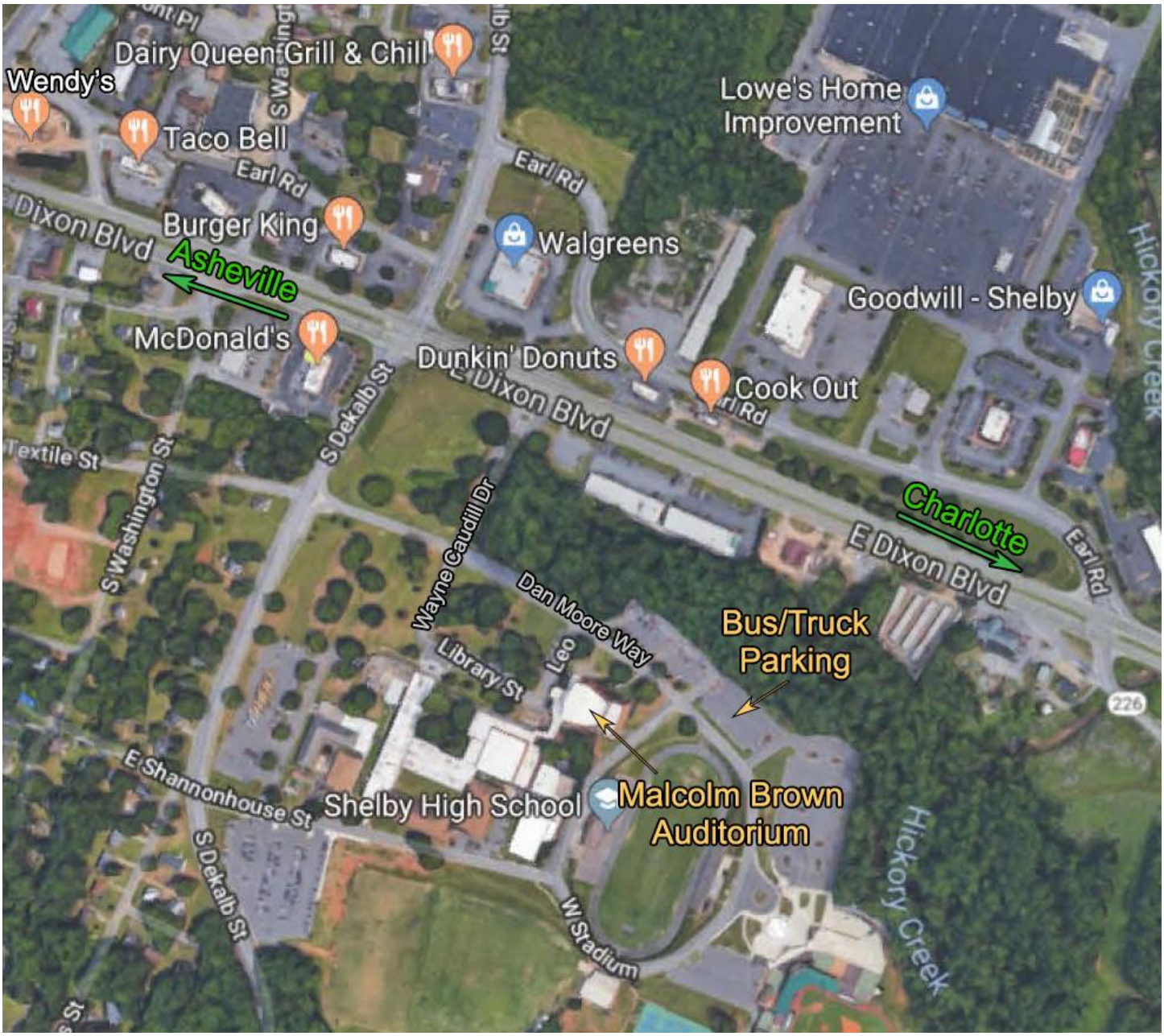
Hotel	Address	Phone #
Country Inn	2001 E Dixon Blvd, Shelby	(704) 480 - 0881
Comfort Inn	2012 E. Marion St., Shelby	(704) 482 - 5666
Fairfield Inn	1715 E Dixon Blvd, Shelby	(704) 487 - 8688
Hampton Inn Shelby	2001-B E Dixon Blvd, Shelby	(704) 487- 2800